BLE/UART/USB Transceiver CH9143

Datasheet

Version: 1B

http://wch.cn

1. Overview

The CH9143 is a BLE/UART/USB transceiver, which implements data transfer among BLE, USB and UART. BLE supports master mode, slave mode and master-slave mode. BLE communication and parameters can be configured in slave mode and master-slave mode, and BLE4.2 is supported. UART supports AT command configuration and MODEM signals, and the highest baud rate is 1Mbps. It can also implement online debug and data monitor between computer USB interface, serial port and BLE.

USB and BLE virtual serial port technology. A PC-side virtual serial port driver is provided, shielding the underlying technical details of BLE and USB, with no secondary development required, compatible with common serial port applications and serial debug tools, easy to implement transmission between 3 "serial ports".

Some application block diagrams of CH9143:

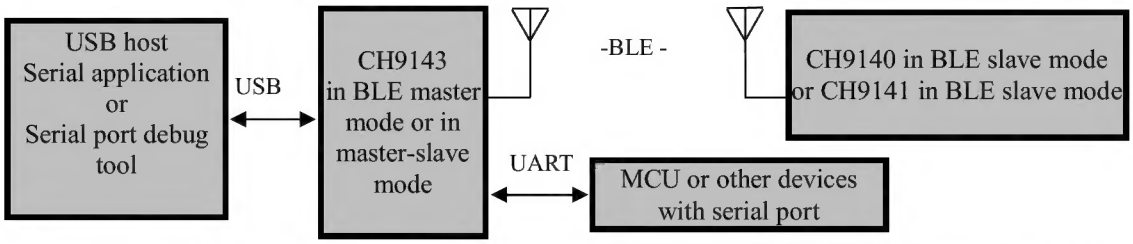

Figure 1 Block diagram of serial communication between CH9143 USB interface and BLE slave or device with serial port

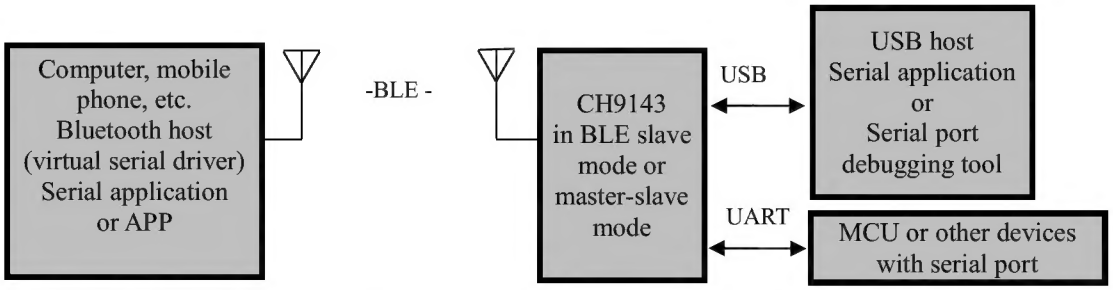

Figure 2 Block diagram of serial communication between Bluetooth host and USB host or device with serial port through CH9143

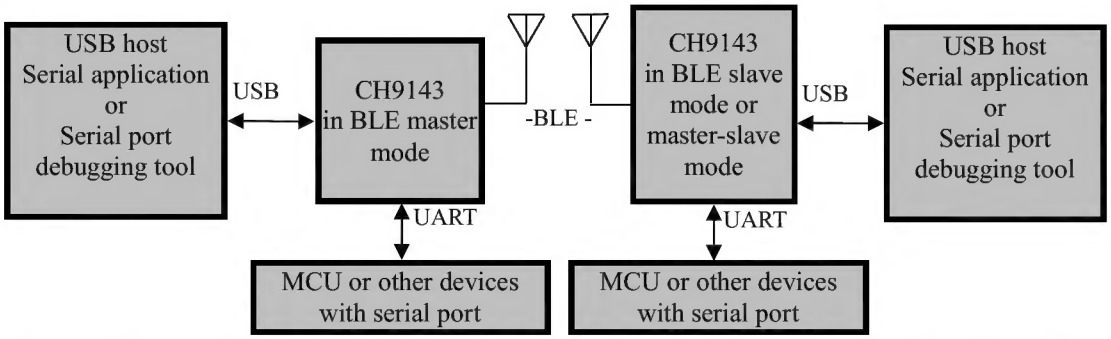

Figure 3 Block diagram of serial communication between USB hosts through CH9143 in BLE master-slave mode

2. Features

- Data transfer between BLE, USB, and UART.
- BLE supports slave mode, master mode and master-slave mode.
- PC-side USB and BLE virtual serial port driver provided.
- Compatible with existing serial port software and tools, with no secondary development required.
- Supports Bluetooth host connection in Windows/Linux/Android/iOS and other systems.
- 2 serial port driver modes: Vendor driver mode and installation-free USB-CDC driver mode.
- 100m BLE transfer distance.
- Adjustable 8 positions of BLE TX power.
- Supports 3.3V and 2.5V operating voltages.
- Supports BLE transfer configuration and serial AT command configuration.
- Maximum baud rate of serial port is 1Mbps.
- Serial port supports MODEM signals: RTS, DTR, DCD, RI, DSR and CTS.
- Serial port supports 5/6/7/8 data bits and 1/2 stop bits.
- Serial port supports odd, even, no parity, space 0 and mark 1.
- Full-speed USB device interface, USB V2.0 compliant.
- 32K clock source, optional external crystal oscillator.
- QFN28_4X4 package.

3. Applications

- MCU/DSP/embedded systems.
- Industrial instrumentation.
- Smart home.
- USB and serial port wireless extension.

4. Package

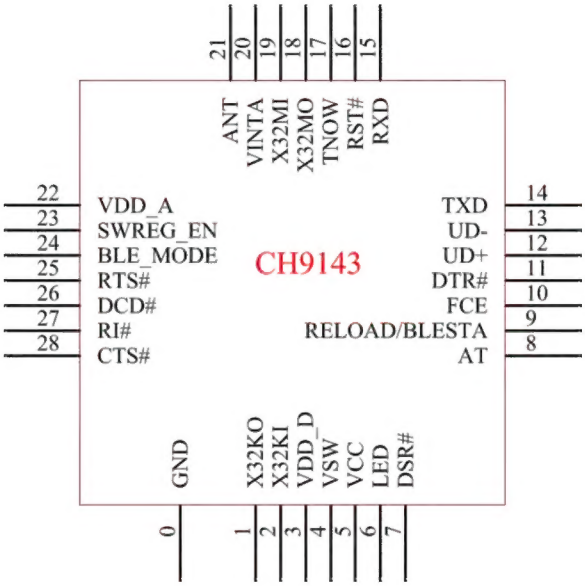

Package	Body size	Lead pitch		Description	Part No.
QFN28	4*4mm	0.4mm	15.7mil	Quad no-lead 28-pin	CH9143

5. Pin definitions

Pin No.	Pin Name	Pin Type	Pin Description
0	GND	P	Ground
1	X32KO	A	Inverted output of low-frequency crystal oscillator
2	X32KI	A	Inverted input of low-frequency crystal oscillator
3	VDD_D	P	Internal power supply input, requires an external 2.2uF decoupling capacitor
4	VSW	P	Internal DC-DC power switch output, connected to VDD_D and VDD_A
5	VCC	P	Power supply input, requires an external 2.2uF decoupling capacitor
6	LED	O	Chip status and data receive/transmit indication output, active low
7	DSR#	I	UART MODEM input signal, data device ready
8	AT	I	AT transparent transmission function switch pin: Low level: AT mode. High level: Transparent transmission mode
9	RELOAD /BLESTA	I/O	Restore factory setting input pin (RELOAD) when powered on, Restore the factory settings after a low level is detected for 2 seconds continuously.

			BLE connection status indication signal output pin (BLESTA) after powered on. It outputs low level when not connected, while it outputs high level when connected.
10	FCE	I	CTS/RTS flow control enable, active low, with built-in pull-up resistor
11	DTR#	O	UART MODEM output signal, data terminal ready
12	UD+	USB signal	USB D+ signal
13	UD-	USB signal	USB D- signal
14	TXD	O	UART transmit pin
15	RXD	I	UART receive pin
16	RST#	I	Chip reset pin, active low
17	TNOW	O	UART transmit data status pin, active high
18	X32MO	A	Inverted output of high-frequency crystal oscillator
19	X32MI	A	Inverted input of high-frequency crystal oscillator
20	VINTA	P	Internal analog circuit power node, requires an external 2.2uF decoupling capacitor
21	ANT	A	RF signal input/output
22	VDD_A	P	Internal chip power supply input, requires an external 0.1uF decoupling capacitor
23	SWREG_EN	I	Internal DC-DC power supply enable, with built-in pull-up resistor Enabled when at low level,
24	BLE_MODE	I	BLE mode selection, with built-in pull-up resistor Low level: Slave mode. High level: Master-slave mode.
25	RTS#	O	UART MODEM output signal, request to send, active low
26	DCD#	I	UART MODEM input signal, data carrier detection
27	RI#	I	UART MODEM input signal, ring indicator
28	CTS#	I	UART MODEM input signal, clear to send, active low

Note: P: Power. A: Analog. I: Input. O: Output.

6. Functional description

6.1 Slave mode

In slave mode, CH9143 transmits fixed broadcast data. The default broadcast name is "CH9143BLE2U" and the interval is 100mS. The slave supports four basic BLE services, and UUID of transparent transmission service is 0xFFF0.

Please refer to the following table for descriptions of UUIDs.

UUID	Property	Description
0xFFF1	Notify	The data received by UART is transmitted to the host through this channel, and the host needs to enable notification. The data will be packaged in the size of MTU, and the remaining data will be transmitted by the chip in separate package.

0xFFF2	Write only	Host transmit data channel, data will be sent out through UART.
0xFFF3	Read, write	Configuration channel, reserved.

6.2 Master-slave mode

In master-slave mode, BLE master and slave work at the same time. When one of them establishes connection with other BLE, the other will stop. It should be noted that CH9143 can only establish connection with our company's other BLE chips when it acts as BLE master. Please refer to Section 6.3 for specific BLE pairing function.

6.3 Smart pairing function

When CH9143 is in master-slave mode, input MAC address and connection can be established between it and specified CH914x, without AT command. After successful pairing, the two establish a binding relationship, and there is no need to pair again for next connection.

Pairing procedure:

1) CH9143 is in master-slave mode. CH9140/CH9143 is in slave mode or in master-slave mode.
2) To establish pairing, the two should complete power-up within 3s.
3) The LED flashes 3 times and then stays on, indicating successful pairing.

To re-establish pairing, a new pairing process is required. The difference is that LED flashes quickly in Step 3. Re-power on either end, and pairing can be re-established.

6.4 Data transfer

Data transfer can be implemented between CH9143 UART, USB and BLE. The data received by one of them can be transmitted to the other 2 interfaces.

CH9143 serial port is a UART. By default, it is configured to 115200bit/s baud rate, 8 data bits, 1 stop bit, no parity, and flow control is enabled. CH9143 USB interface is a USB2.0 full-speed device, which communicates with PC through analog serial device, compatible with common serial software.

The serial port can be configured with AT. Pull the AT pin to low level to enter AT mode. When performing AT configuration, it is recommended to ensure the end of data transfer. When entering AT configuration, the currently received transparent transmission data will be lost if it is not saved, and the data that has been saved in the receive buffer will continue to be sent when exiting AT mode. The data received by BLE will be sent directly to other interfaces, and the data will not be temporarily stored. When there is a lot of Bluetooth data, it will wait to be sent. If it has entered AT mode, the data received by BLE will be discarded directly.

6.5 LED

Table of LED status description

No.	Status	Description
1	once quickly flashes 3 times after powered on	currently in slave mode
2	twice quickly flashes 3 times after powered on	currently in master-slave mode
3	slowly flashes at 500ms intervals	currently in broadcast status
4	keeps on	currently in connection status

5	quickly flashes in connection status	currently performing data transmission
6	quickly flashes in pairing process	has been paired with other devices, need power-up again to complete pairing

6.6 External 32K automatic detection

The CH9143 supports automatic detection of external 32K crystals. The on-chip 32K clock is used if there is no external 32K crystal. Otherwise, the external 32K crystal is used with the on-chip crystal oscillator to provide the input clock.

7. AT instruction set

7.1 AT basic format

The CH9143 acts as a serial port slave device in AT mode, and the master (host) connected to it acts as a serial port master device. The AT commands are sent by the master, and the CH9143 responds.

Basic format of master transmission:

<AT><+><command code><operator><parameter><{CR}{LF}>

Note: Most are command codes, and some commands are different. For details, see the command set below. The {CR} and {LF} respectively correspond to "\r" and "\n" defined by the character format, which are 0x0D and 0x0A in hexadecimal, the carriage return and line feed in ASCII. They are used as a delimiter and a terminator in the command.

Return basic format:

Return parameter format: <parameter><{CR}{LF}><OK><{CR}{LF}>

Return success status: <OK><{CR}{LF}>

Return error status: <{CR}{LF}><ERR:><error code><{CR}{LF}>

Note: The error code is a code in HEX composed of 2 ASCII characters. For example, the error code "01" means 0x01 in hexadecimal. The error codes and the meanings are shown in the table below:

Error code	Meaning
01	Buffer error. The device has no buffer to respond, please try later.
02	Parameter error. Some parameters of the sent AT command do not meet the specifications. Note that the device does not judge all parameters, and external guarantees are required to ensure the basic correctness.
03	Command not supported. The command is not supported in current mode, such as the connection command sent in broadcast mode.
04	Command cannot be executed. The command cannot be executed temporarily, please try later. Generally, it is caused because there is no enough buffer to process the command and the device is busy.

7.2 UART configuration command set

No.	Command	Description
1	AT...	AT mode test
2	AT+MAC	Query the local MAC address
3	AT+CCADD	Query the current connected MAC address
4	AT+CONNINTER	Connection interval setting
5	AT+TPL	Query/Set the TX power
6	AT+UART	Query/Set UART parameter
7	AT+LSICALI	Internal 32K clock calibration setting
8	AT+RFCALI	BLE RF calibration setting

1. AT mode test

   Command: AT...{CR}{LF}

   Description: To detect whether the device is in AT mode. If it is in AT mode, there will be a response after this command is sent

   Return: OK{CR}{LF}

   For example: Host sends: AT...{CR}{LF} Device responds: OK{CR}{LF}

2. MAC address

   Query command: AT+MAC?{CR}{LF}

   Description: To read the BLE MAC address of the device. The format of the returned parameters: xx:xx:xx:xx:xx:xx. The MAC is in little-endian format, LSB-first. It is not supported to set MAC.

   Return: BLE MAC address

   For example: Host sends: AT+MAC?{CR}{LF}

   Device returns: 05:DF:39:4C:99:B4{CR}{LF}OK{CR}{LF}

   Setting command: AT+MAC=xx:xx:xx:xx:xx:xx{CR}{LF}. Parameters are entered in little-endian format.

   Description: The MAC parameters are not recommended to be modified. The device will not verify the validity of the parameter when it is modified. It takes effect at the next power-on or reset.

   For example: Host sends: AT+MAC=05:DF:39:4C:99:B4{CR}{LF}

   Device responds: OK{CR}{LF}

3. Get the current connected MAC address

   Command: AT+CCADD?{CR}{LF}

   Description: To get the address of MAC connected to the device currently. The MAC is in little-endian format, LSB-first. It returns empty MAC address when MAC is not connected to the device.

   Return: Address of the connected MAC.

   For example: Host sends: AT+CCADD?{CR}{LF}

   Device responds: 05:DF:39:4C:99:B4{CR}{LF}OK{CR}{LF}

4. Set the connection interval AT+CONNINTER

   Query command: AT+CONNINTER?{CR}{LF}

Description: To query the current connection interval parameter of the device. The return value is an interval, corresponding to the minimum value and the maximum value. The Bluetooth protocol will negotiate a communication time when it is connected. If the parameters are not satisfied, the device will initiate renegotiation. The unit of value is 1.25mS.

For example: Host sends: AT+CONNINTER?{CR}{LF}
Device responds: 6-16{CR}{LF}OK{CR}{LF}

Setting command: AT+CONNINTER=<parameter 1>-<parameter 2>{CR}{LF}

Description: To set the connection interval parameter. The parameter range needs to meet the requirements of the Bluetooth protocol, and the set value should not exceed 65535.

For example: Host sends: AT+CONNINTER=6-160{CR}{LF}
Device responds: OK{CR}{LF}

5. TX power

Query command: AT+TPL?{CR}{LF}

Description: Query the current BLE TX power.

Return: Power level.

For example: Host sends: AT+TPL?{CR}{LF} Device responds: 0{CR}{LF}OK{CR}{LF}

Setting command: AT+TPL=<x>{CR}{LF}

Description: To set the BLE TX power. The x can be: 0 (0DB), 1 (1DB), 2 (2DB), 3 (3DB), 4 (-3DB), 5 (-8DB), 6 (-14DB), 7 (-20DB). And it cannot be other values. The set parameter is saved, and takes effect on the next reboot.

For example: Host sends: AT+TPL=1{CR}{LF} Device responds: OK{CR}{LF}

6. UART setting

Get command: AT+UART?{CR}{LF}

Description: To return the current UART parameter configuration.

Return: <baud rate>,<data bit>,<stop bit>,<parity bit>,<timeout>{CR}{LF}

For example: Host sends: AT+UART?{CR}{LF}
Device responds: 115200,8,1,1,50{CR}{LF}OK{CR}{LF}

Setting command: AT+UART=<baud rate>,<data bit>,<stop bit>,<parity bit>,<timeout>{CR}{LF}

Description: To set UART parameters. The baud rate can be: 9600bit/s, 19200bit/s, 38400bit/s, 57600bit/s, 115200bit/s, 1000000bit/s. The data bit can be: 8, 9. The stop bit can be: 1, 2. The parity bit can be: 0 (no parity), 1 (odd parity), 2 (even parity). The timeout is the data timeout in transparent transmission mode, in ms. The device will save the set parameters and returns response after this command is sent, and UART will be re-initialized according to the configured parameters after 5mS.

For example: Host sends: AT+UART=115200,8,1,0,50{CR}{LF}
Device responds: OK{CR}{LF}

7. Internal 32K clock calibration setting AT+LSICALI

Query command: AT+LSICALI?{CR}{LF}

Description: To return the current internal 32K clock calibration parameter, including 3 parameter domains which are separated by commas. The parameter format is:

<calibration mode>,<temperature difference threshold >,<timing time>{CR}{LF}. Definition of calibration mode value: 0: calibration disabled. 1: calibrated by timing. 2: calibrated by temperature difference. Temperature difference threshold: the set value is the difference in temperature difference, after this value is set, it will be used when calibrated by the temperature difference. Timing time: In ms, set the timing time of two calibration methods.

For example: Host sends: AT+LSICALI?{CR}{LF}
Device responds: 2,7,5000{CR}{LF}OK{CR}{LF}

Setting command: AT+LSICALI=<calibration mode>,<temperature difference threshold>,<timing time>{CR}{LF}

Description: To set the current calibration mode of LSI clock. For parameter definitions, please refer to the query command.

For example: Host sends: AT+LSICALI=2,10,10000{CR}{LF}
Device responds: OK{CR}{LF}

8. RF calibration setting AT+RFCALI

Query command: AT+RFCALI?{CR}{LF}

Description: To return current RF calibration parameter, including 3 parameter domains which are separated by commas. The parameter format is: <calibration mode>,<temperature difference threshold>,<timing time>{CR}{LF}. Definition of calibration mode value: 0: calibration disabled. 1: calibrated by timing. 2: calibrated by temperature difference. Temperature difference threshold: the set value is the difference in temperature difference, after this value is set, it will be used when calibrated by the temperature difference. Timing time: In ms, set the timing time of two calibration methods. The two setup calibration commands have the same format.

For example: Host sends: AT+RFCALI?{CR}{LF}
Device responds: 2,7,5000{CR}{LF}OK{CR}{LF}

Setting command: AT+RFCALI=<calibration mode>,<temperature difference threshold>,<timing time>{CR}{LF}

Description: To set the current RF calibration mode. For parameter definitions, please refer to the query command.

For example: Host sends: AT+RFCALI=2,10,10000{CR}{LF}
Device responds: OK{CR}{LF}

8. Parameters

8.1 Absolute maximum ratings

Stresses at or above the absolute maximum ratings listed in the table below may cause permanent damage to the device.

Symbol	Parameter description	Min.	Max.	Unit
TA	Operating ambient temperature	-40	85	℃
TS	Storage ambient temperature	-40	105	℃
VCC	System supply voltage	-0.4	3.9	V

VIO	Voltage on input or output pins	-0.4	VCC+0.4	V

8.2 Electrical characteristics

Symbol	Parameter description	Min.	Typ.	Max.	Unit
VCC	Supply voltage	2.5	3.3	3.6	V
VIL	Low level input voltage	0		0.9	V
VIH	High level input voltage	2.0		VCC	V
VOL	Low level output voltage	0	0.3	0.4	V
VOH	High level output voltage	VCC-0.4	VCC-0.3	VCC	V
IUP	Input current of the input with a built-in pull-up resistor	25	60	90	uA